WATERMARK

BROOKLYN, NEW YORK

Available in all finishes shown on the Watermark Designs website

Blue

37-7.3PG4-BL4

Deck Mounted, Gooseneck, Monoblock Kitchen Faucet with Pull Down Spray - Low Spout

- Pullout Hose Length: 14-16” (Final Length May Vary Depending on Spout Type)
- Fits Deck Up To 1-1/2” Thick
- Recommended Mounting Hole: 1-3/8”
- All Lead-Free Brass Construction
- Flow Rate: 1.75 GPM Max @ 45-80 PSI
- Kerox Ceramic Mixing Cartridge
- 2 Flow Patterns, Aerated and Spray, Controlled By One Button
- 360° Rotating Spout with Magnetic Docking for Spray
- Professional Installation Required

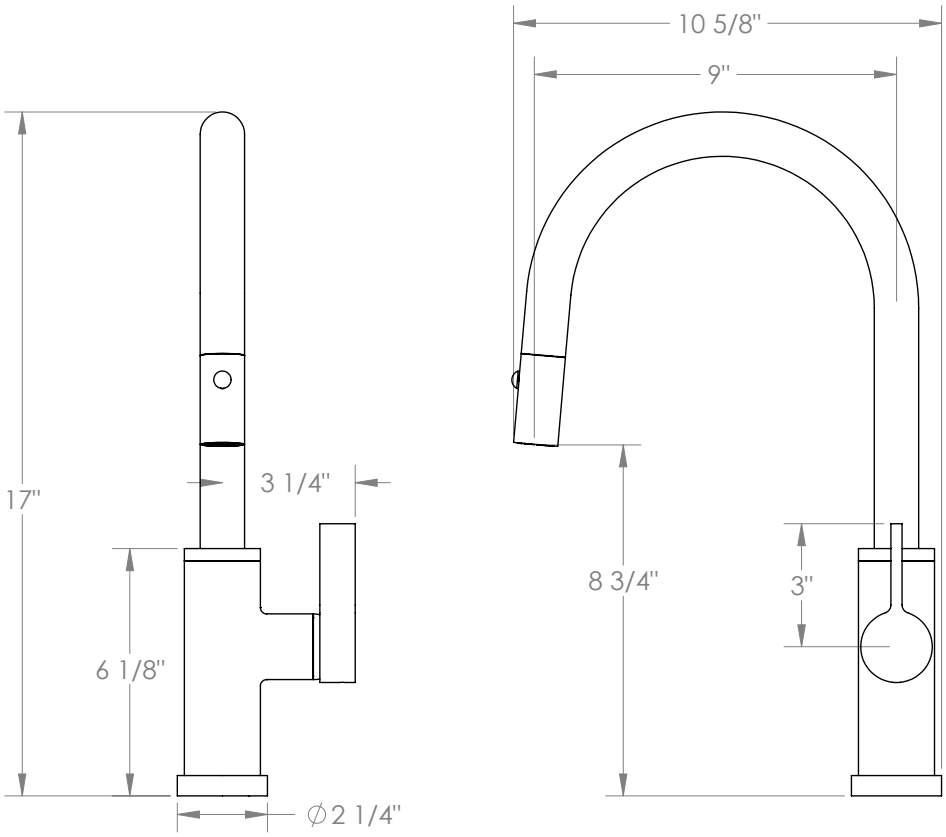

Meets the applicable requirements of ASME A112.18.1-2005/CSA B125.1-05, entitled “Plumbing Supply Fittings”.
Watermark Designs reserves the right to make revisions without notice to produce specifications. All product dimensions are nominal. **Updated:** 11/2025

350 Dewitt Ave. Brooklyn, NY 11207 USA | T: 1 718 257 2800 | F: 1 718 257 2144 | customerservice@watermark-designs.com