WATERMARK

BROOKLYN, NEW YORK

Available in all finishes shown on the Watermark Designs website

Refinement

19-HSPB2-LT4S

Positioning Bar Shower kit

- Includes 69” Hose, DS-5079
- Includes SH-S1000B3 Handshower
- Handshower Holder on Slider Pivots
- Flow Rate: 1.75 GPM
- All Solid Brass Construction
- Professional Installation Required

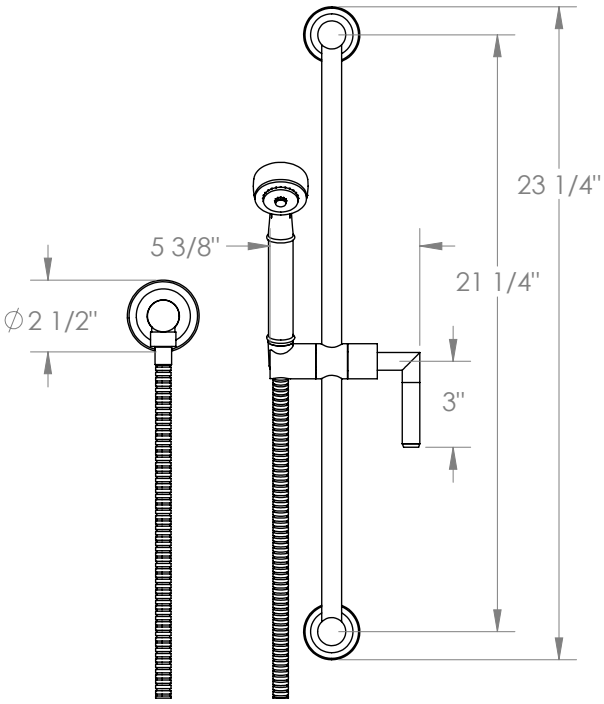

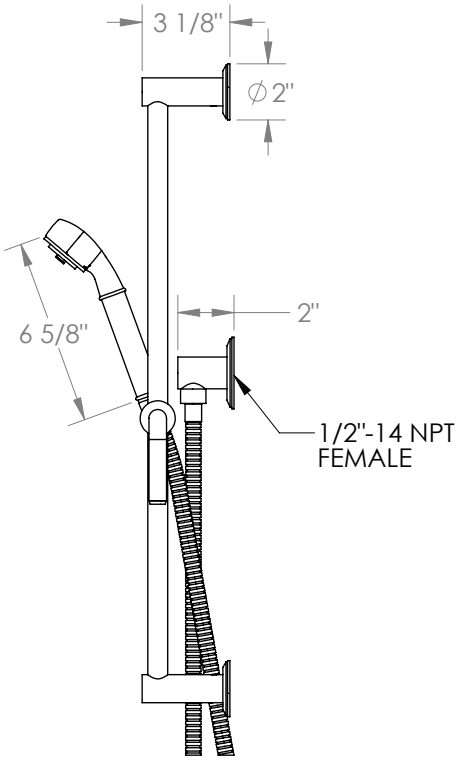

Meets the applicable requirements of ASME A112.18.1/CSA B125.1, entitled “Plumbing Supply Fittings”.
Watermark Designs reserves the right to make revisions without notice to product specifications. All product dimensions are nominal.

Updated: 02/2026

350 Dewitt Ave. Brooklyn, NY 11207 USA | T: 1 718 257 2800 | F: 1 718 257 2144 | customerservice@watermark-designs.com