WATERMARK

Product Image

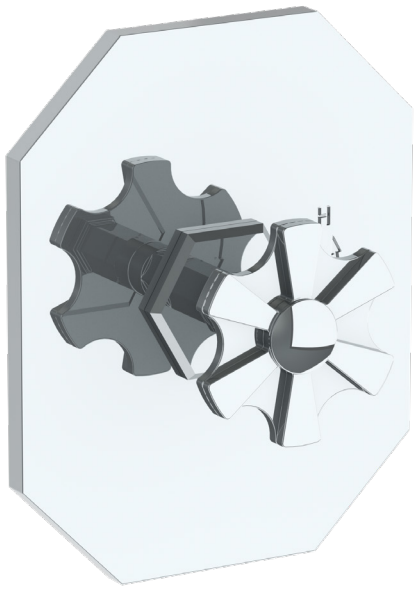

James

133-P80U-JA6

Wall Mounted Pressure Balance Shower Trim

- To be used with SS-PB75
- Optional item: EXT20
- Ceramic mixing cartridge with integral pressure balancing
- All solid brass construction
- Professional Installation Required

Technical Drawing

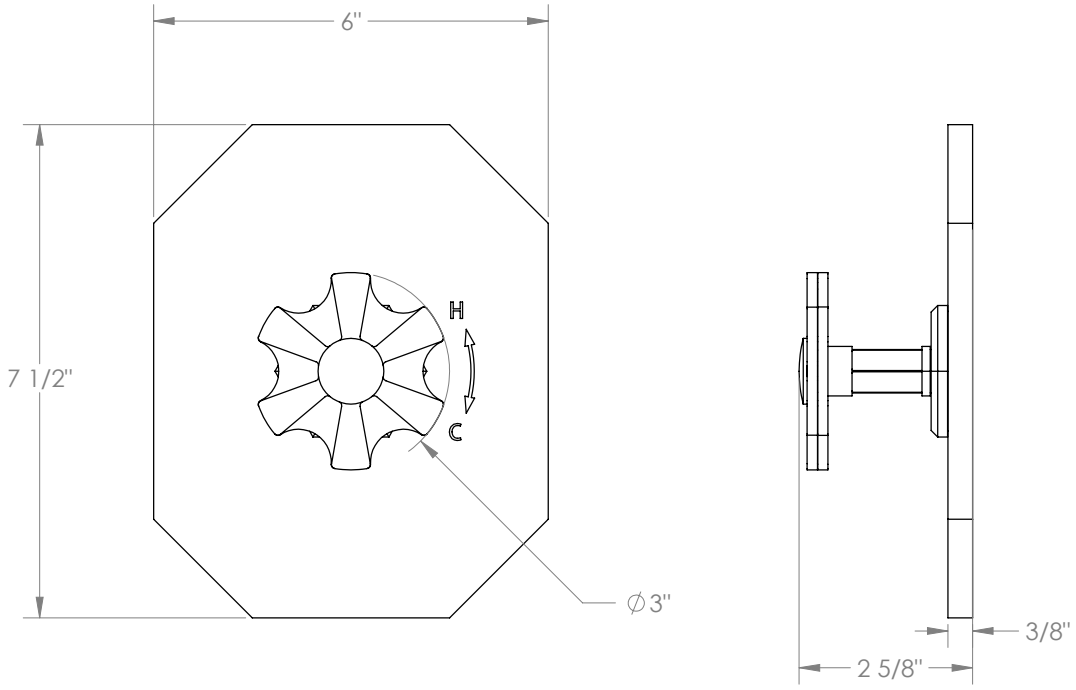

Watermark reserves the right to make revisions without notice to product specifications. All product dimensions are nominal.

350 Dewitt Ave. Brooklyn, NY 11207 USA
T: 1 718 2572800 F: 1 718 2572144
customerservice@watermark-designs.com

Meets the applicable requirements of ASME A112.18.1/CSA B125.1, entitled "Plumbing Supply Fittings".

Updated 11/2026