WATERMARK

Product Image



James

133-MAS7-JA5

Toilet Angle Stop Kit

- 1/2" sweat x 3/8" OD compression
- 1/4 turn ceramic cartridge
- All solid brass construction
- Professional Installation Required

Technical Drawing

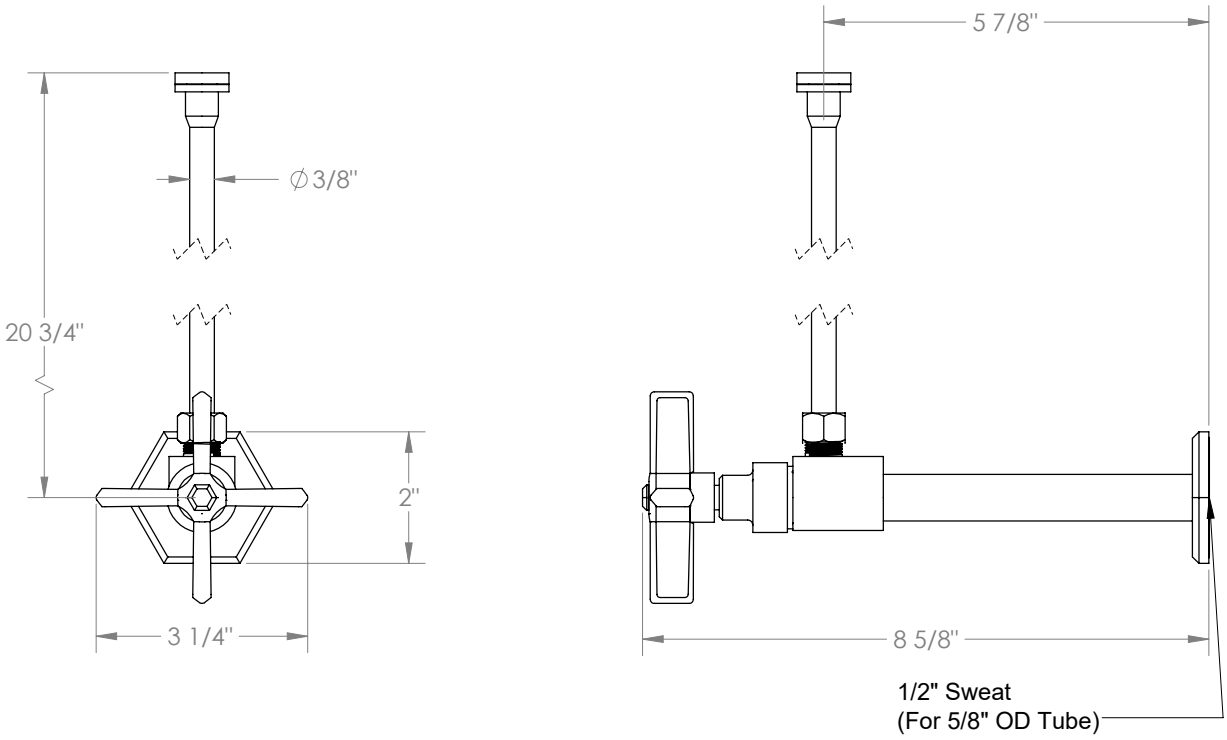

Watermark reserves the right to make revisions without notice to product specifications. All product dimensions are nominal.

350 Dewitt Ave. Brooklyn, NY 11207 USA
T: 1 718 2572800 F: 1 718 2572144
customerservice@watermark-designs.com

Meets the applicable requirements of ASME A112.18.1/CSA B125.1, entitled "Plumbing Supply Fittings".

Updated 11/2026