WATERMARK

BROOKLYN, NEW YORK

INSTALLATION INSTRUCTIONS
PRESSURE BALANCE VALVE

Features

- Operating pressure is 20 PSI to 70 PSI
- Supplied temperature range is 50°F to 140°F
- All inlets and outlets are ½" NPT

Note

- During sweating of inlet lines do not overheat casting. Overheating may cause damage to internal mechanisms and void the manufacturer's warranty as well as increase the risk of scalding.
- Do not use plumber's putty, chemical cleaners or any product with ammonia on any of the brass components. This will cause the finish to tarnish and void the warranty. A non-corrosive 100% silicone is recommended.
- Does not work with tub spouts with built-in diverters

SS-PB75:

- Pressure Balance Valve

Pressure (PSI)	Flow Rate (GPM)
20	3.67
40	5.07
45	5.68
60	6.58

NOTE: Keep unused outlets capped.

Valve Mounting Position

- Use chart in *Cutting to Fit* section to determine what depth to install the Valve from the finished wall.
- Turn off water supplies and use **Screws**(10) *(not provided)* to secure Valve in unfinished wall.
- **Mud Guard**(8-9) may be removed during installation, but must be refitted prior to finishing wall.
- Remove **Stem Assembly**(1-6), **Cartridge**(7) and **Stops**(11) and connect Valve to water supplies and outlets.
- Flush system and then reinstall **Stem Assembly**(1-6), **Cartridge**(7) and **Stops**(11).
- For back-to-back installations, where the right inlet is hot and the left inlet is cold, remove **Stem Assembly**(1-6) and **Cartridge**(7) and rotate **Cartridge**(7) 180° and then reinstall.
- Pressure test and check for leaks.

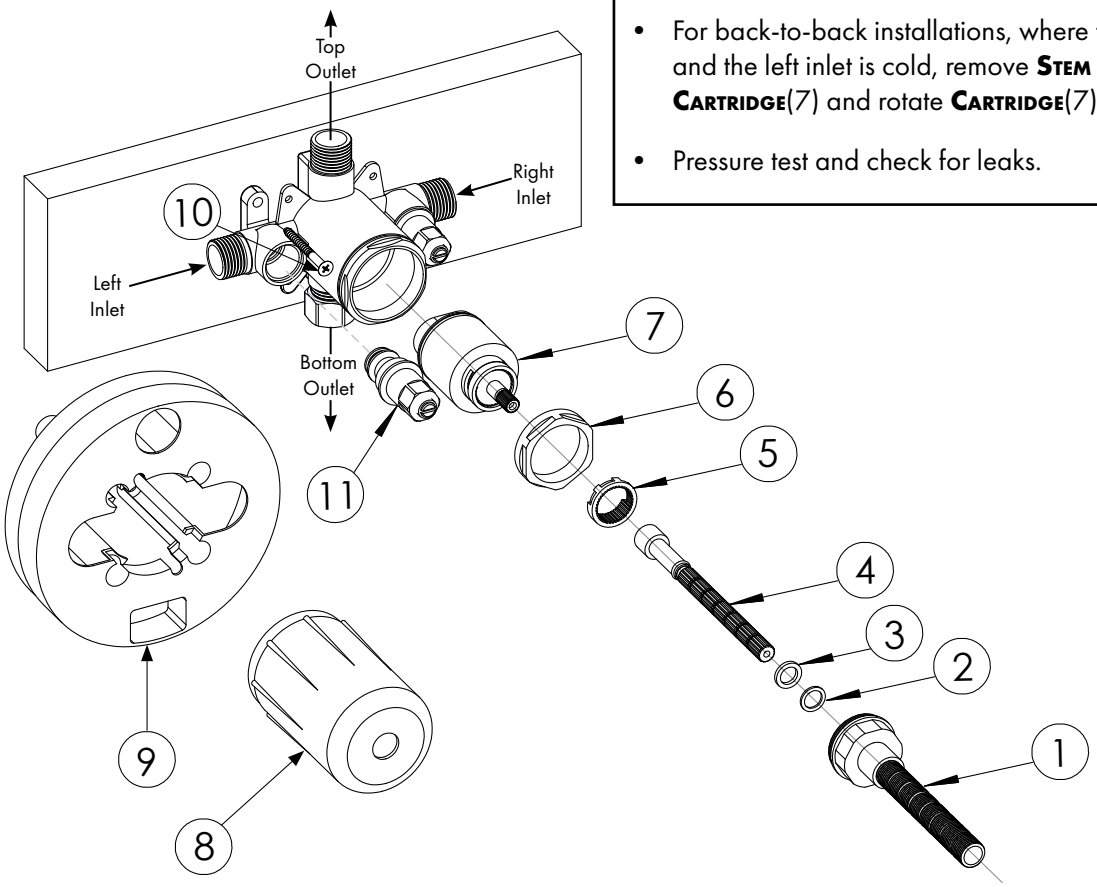

350 DEWITT AVENUE BROOKLYN, NEW YORK 11207
+1-718-257-2800

WATERMARK

BROOKLYN, NEW YORK

INSTALLATION INSTRUCTIONS
PRESSURE BALANCE VALVE

Wall Cut Out

- An access hole of 6" in diameter is needed in the finished wall to maintain access to both the cartridge and service stops.

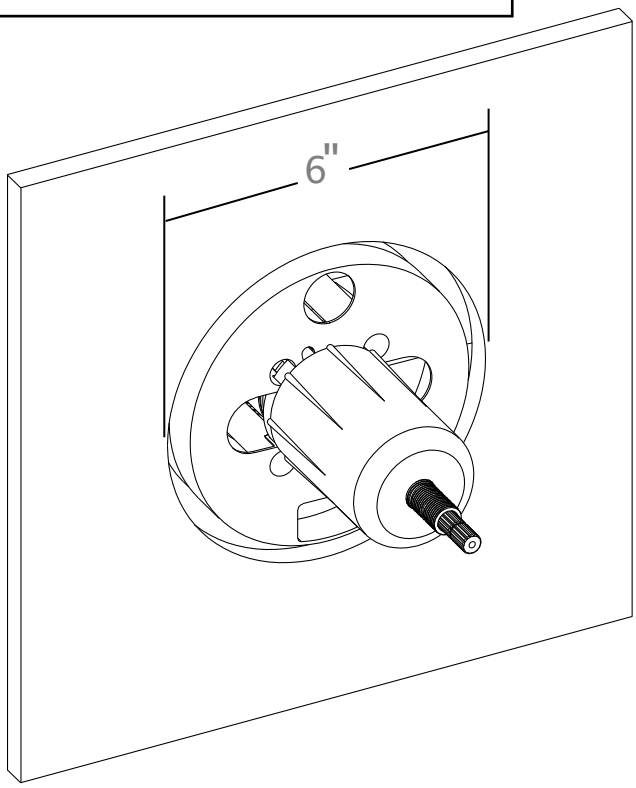

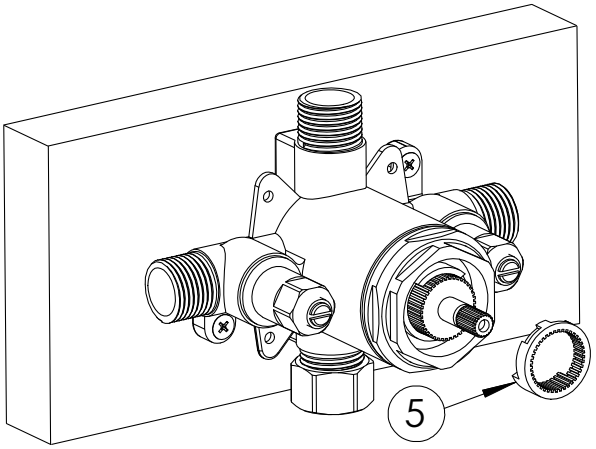

Temperature Setting

- Valve temperature comes preset from factory in neutral position.
- To access **Temperature Limit Ring**(5), remove **All-Thread**(1), and **Stem**(4) with both **Rubber Washer**(3) and **Plastic Washer**(2).

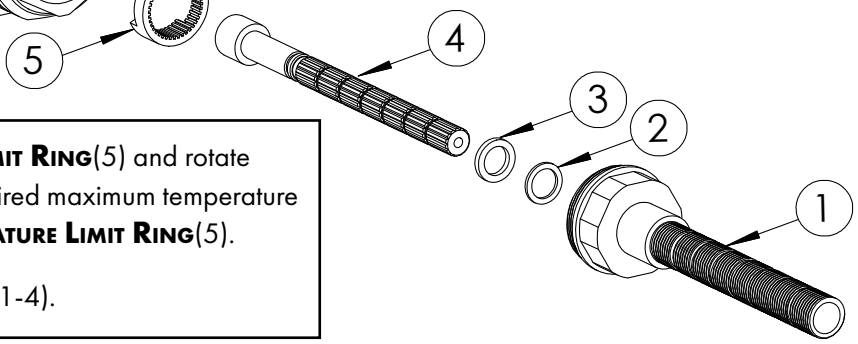

- Remove **Temperature Limit Ring**(5) and rotate **Cartridge**(7) stem to desired maximum temperature and then reinstall **Temperature Limit Ring**(5).
- Reinstall **Stem Assembly**(1-4).

350 DEWITT AVENUE BROOKLYN, NEW YORK 11207
+1-718-257-2800

WATERMARK

BROOKLYN, NEW YORK

Installation Instructions
Pressure Balance Handles

Cutting to Fit

- **Stem**(4) and/or **All-Thread**(1) may need to be cut for handle to mount properly and sit flush with the trim plate.
- Use table to find the lengths that the **Stem**(4) and **All-Thread**(1) need to be for a proper fit.
- When reinstalling be sure that **Rubber Washer**(3) and then the **Metal Washer**(2) go onto **Stem**(4).

* **X"** and **Y"** are the distances from the tip of the All-Thread and Stem to the finished wall. **NOT THE AMOUNT TO CUT OFF**.

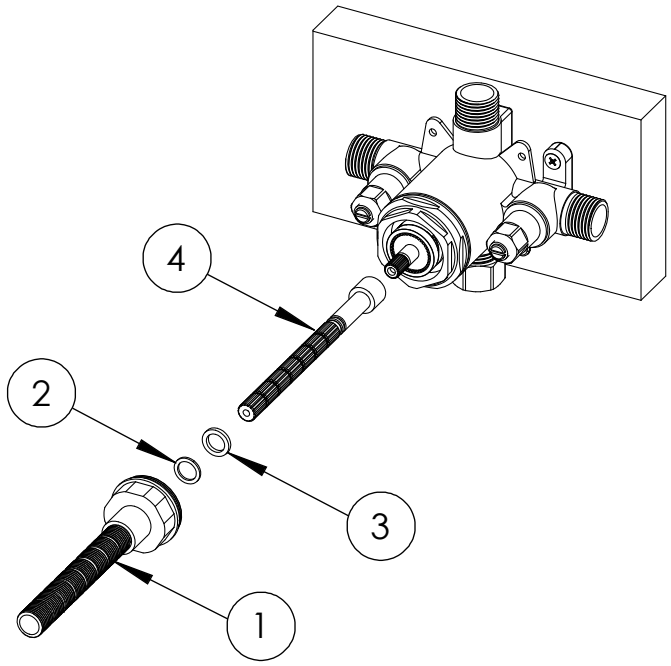

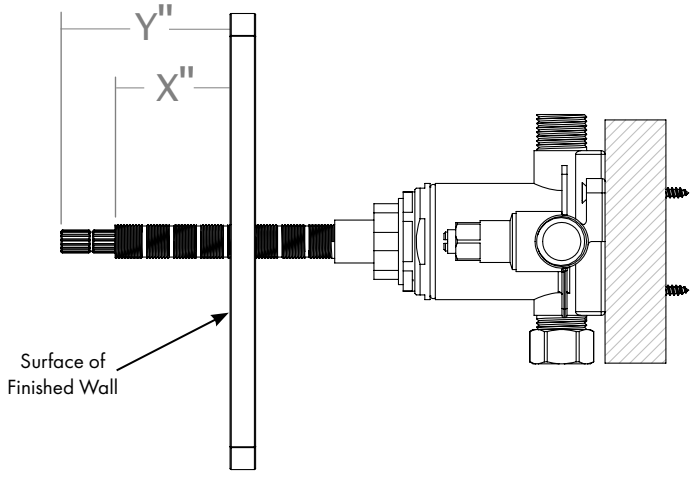

Collection Name	Handle Name	X" All-Thread Length (in.)	Y" Stem Length (in.)
19 Refinement	LT4	11/16	1 9/16
	LT6	1/16	1/2
21 Elements	E1, E2, E3, KNE1, KNE2, KNE3, LKE1, LKE2, LKE3	1 7/16	1 13/16
22 Titanium	TIA, TIB, TIC	1 7/16	2 1/4
23 Loft 2.0	L8	1 7/16	2 5/16
	L9	1 7/16	2 1/8
25 Urbane	IN14	2 1/16	3
	IN16	2 1/16	3
27 Sense	CL14, CL15	1 3/4	2 5/8
	CL16	1 3/8	2 5/16
29 Transitional	TR14, TR15	2 1/8	3 1/16
30 Anika	TR24, TR25	1 5/16	2 1/8
31 Brooklyn	BK, BKA1	1 7/16	2 5/16
34 Haley	B9M	1 7/16	2 5/8
	DD2, DD3	1 1/2	2 1/4
	H4	1 1/16	2 5/8
	S1, S1A	1 7/8	2 11/16
36 Zen	BL1	1 7/16	1 3/4
	CM, HD, HL, IW, MM, NM, WM	1 7/16	2 1/16
37 Blue	BL2, BL3	1 7/16	2 1/4
38 Elan Vital	EV4	7/8	1 7/8
45 Thea	TA4, TA6	1 7/16	2 1/4
64 Brut	BR4	3/16	11/16
70 Rainey	RNK8, RNS4	1 1/4	2 1/16
71 Lily	LLD4, LLO6, LLP5	1 1/4	2 1/16
111 Sutton	SP4, SP5	1 9/16	2 1/8
115 H-Line	MZ4, MZ5	2 3/16	2 3/4
125 Chelsea	BG4, BG5	1 5/16	1 13/16
133 James	JA4	5/8	1 1/2
	JA5, JA6	15/16	1 3/16
180 Venetian	AA	2 3/4	3 9/16
	BB	2 7/8	3 9/16
	CC	3	3 3/4
	DD	3	3 11/16
	SWU, U	2 7/16	3 1/8
	T	2 7/16	3 3/16
206 Paris	S1, S1A, S2, SWA	1 7/8	2 3/16
	V	1 7/8	2 1/2
312 Gramercy	V	1 7/8	2 1/2
	X	2 1/2	3
	Y	2 1/2	3 13/16
	Y2	1 7/8	2 11/16
314 Beverly	CRY4	2 1/4	2 11/16
	CRY5	2 1/4	2 7/8
	T6	2 1/4	3 1/16
	XX	2 1/4	2 13/16
	YY	2 1/4	2 11/16
321 Stratford	S1, S1A, S2, SWA	1 7/8	2 11/16
	V	1 7/8	2 1/2

350 DEWITT AVENUE BROOKLYN, NEW YORK 11207
+1-718-257-2800

WATERMARK

BROOKLYN, NEW YORK

INSTALLATION INSTRUCTIONS
PRESSURE BALANCE HANDLE

* These instructions are for handles that mount with a set screw in the handle. Example below is a representative model.

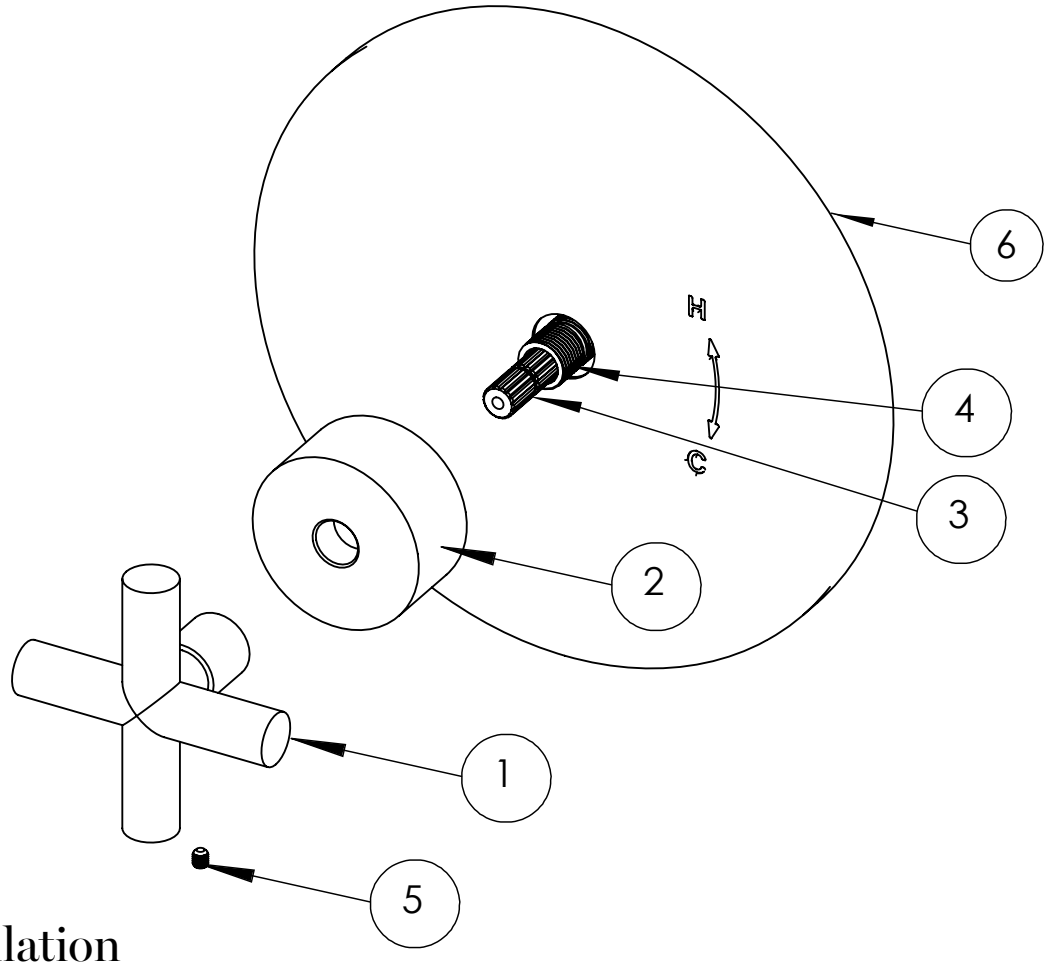

Handle Installation

- Check that **Stem**(3) and **All-Thread**(4) are cut correctly for selected handle. (*Refer to table in the Cutting To Fit section).*
- Slip **Faceplate**(6) over **Stem**(3) and onto finished wall.
- Thread **Escutcheon**(2) onto **All-Thread**(4) so that it sits flush against the **Faceplate**(6).
- Slide **Handle**(1) onto **Stem**(3) making sure that it is fully seated.
- A small gap is needed between **Handle**(1) and **Escutcheon**(2) to prevent binding.
- Use **Set Screw**(5) to secure **Handle**(1) onto **Stem**(3).

350 DEWITT AVENUE BROOKLYN, NEW YORK 11207
+1-718-257-2800

Troubleshooting

Malfunction	Cause	Remedy
Shower control opening through hot	Hot and cold water supplies have been connected in reverse	Rotate cartridge
Tub filler or shower head drips after shutting off the valve	Water remains in the shower piping column (this is normal) Incorrect setting of the mechanical stop against the stop post causing a partially opened cartridge	Allow approximately 35 minutes to drain column. Do not stop dripping by applying excessive force when closing the valve. Reset the mechanical stop as described in "Temperature Setting"
Shower insufficiently hot	Incorrect setting of the temperature limit stop	Reset the temperature limit stop as described in "Temperature Setting"
No flow of hot or cold water	Either the hot or cold side is not fully pressurized Debris in the inlet filter and/or cartridge and/or check valves	Be sure check valves are both fully open and system is fully pressurized. Remove filter inserts and filters, cartridge, and check valves, and remove any debris.
Valve body too deep into wall	The measured rough in or finished wall surface is incorrect	Install the proper extension kit: SSEXT20 for shower valve SSEXT81 for tub/shower valve with diverter (need to specify finish)