WATERMARK

BROOKLYN, NEW YORK

INSTALLATION INSTRUCTIONS
MINI THERMOSTATIC TRIM

Trim Plate Installation

- Thread the Temperature Control Dome (1) and Volume Control Dome (5) (where applicable) onto valve.
- Slide the Thermostatic Face Plate (2) onto the valve by sliding it over the Temperature Control Dome (1) and Volume Control Dome (5) (where applicable) and hold in place.
- If the surface of the finished wall is NOT flush with the MINIMUM mark on the MUD GUARD you will need to use the Dome Sleeve(s) (3). This is done by threading the Thermostatic Face Plate Lock Ring(s) (4) into the Dome Sleeve(s) (3).
- Lock the Face Plate (2) securely against the wall by screwing Lock Ring(s) (4) onto Temperature Control Dome (1) and Volume Control Dome (5) (where applicable).

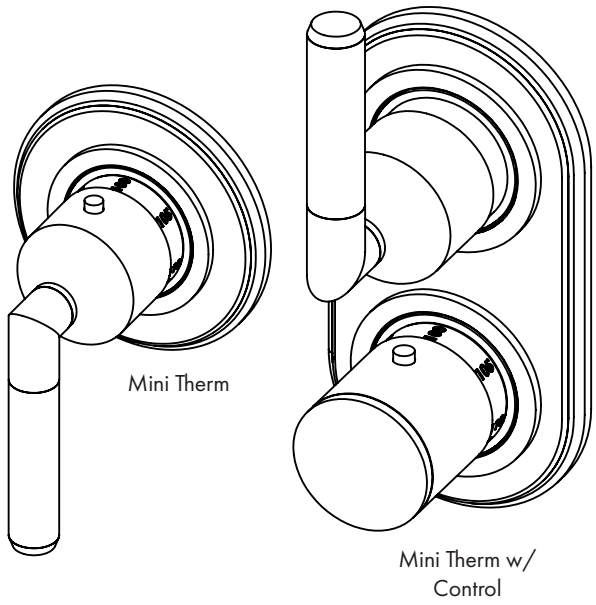

Mini Therm

Mini Therm w/ Control

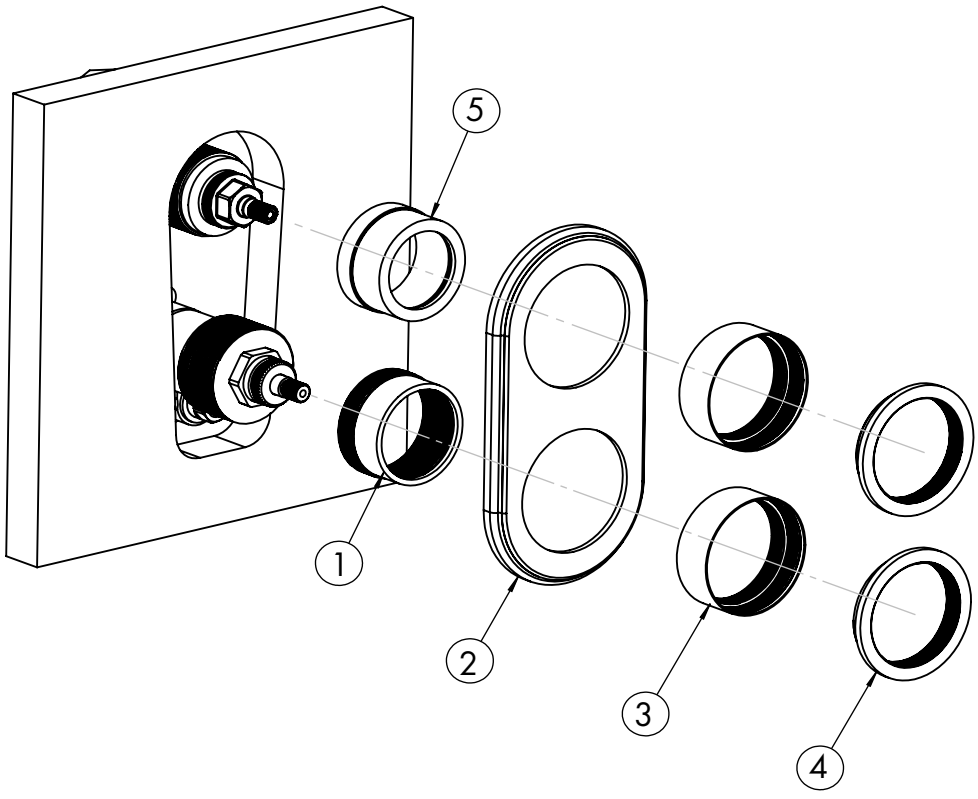

350 DEWITT AVENUE BROOKLYN, NEW YORK 11207
+1-718-257-2800

INSTALLATION INSTRUCTIONS
MINI THERM HANDLE

NOTE: Follow these same instructions to install Handles to Volume Control Valves when working with a Single or Dual Control

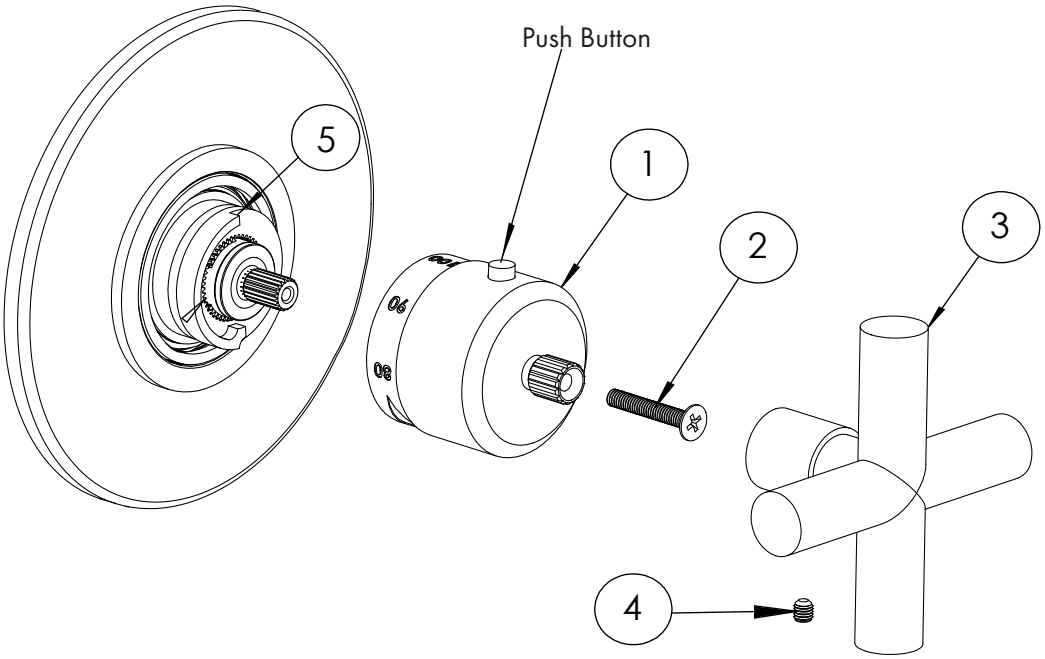

Handle Installation (Set Screw on Handle)

- Check that the **Temperature Limit Stop Ring**(5) is installed with the red dot at the 12 o'clock position.
- Install the **Temperature Control Post**(1) onto the valve with push button at 12 o'clock position.
- Use **Screw**(2) to secure the **Control Post**(1) onto Thermostatic valve
- Slide the **Handle**(3) onto the **Control Post**(1) and secure together with **Set Screw**(4)
- *NOTE: Some heavier handles come with friction washer to prevent rotation due to gravity. The thinner of these washers is for use with this valve when needed

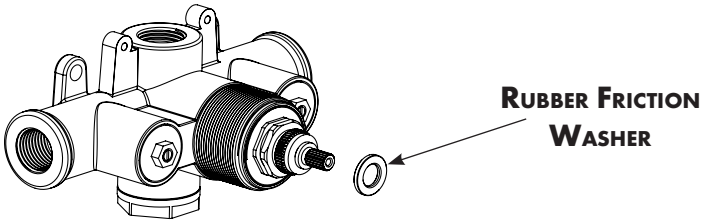

350 DEWITT AVENUE BROOKLYN, NEW YORK 11207
+1-718-257-2800

NOTE: Follow these same instructions to install Handles to Volume Control Valves when working with a Single or Dual Control

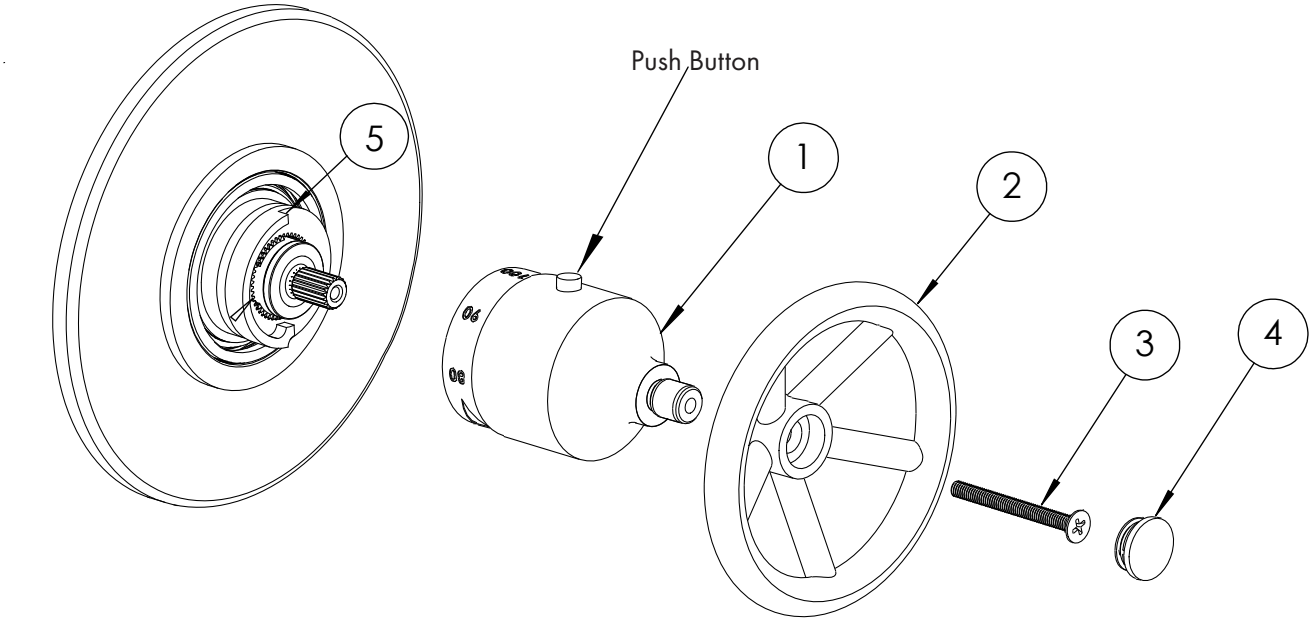

Handle Installation (Through Screw)

- Check that the **Temperature Limit Stop Ring**(5) is installed with the red dot at 12 o'clock position.
- Use **Screw**(3) to secure both the **Control Post**(1) and **Handle**(2) to the Thermostatic valve.
- Install **Lever Cap**(4) to conceal screw head.
- *NOTE: Some heavier lever handles come with friction washers to prevent rotation due to gravity. The thinner of these washers is for use with this valve when needed.

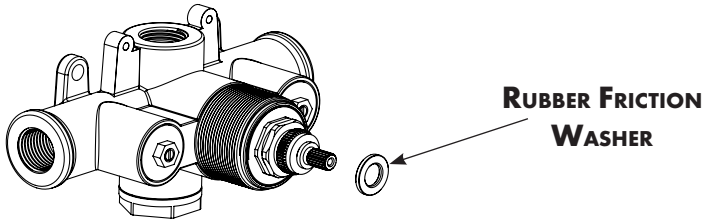

350 DEWITT AVENUE BROOKLYN, NEW YORK 11207
+1-718-257-2800

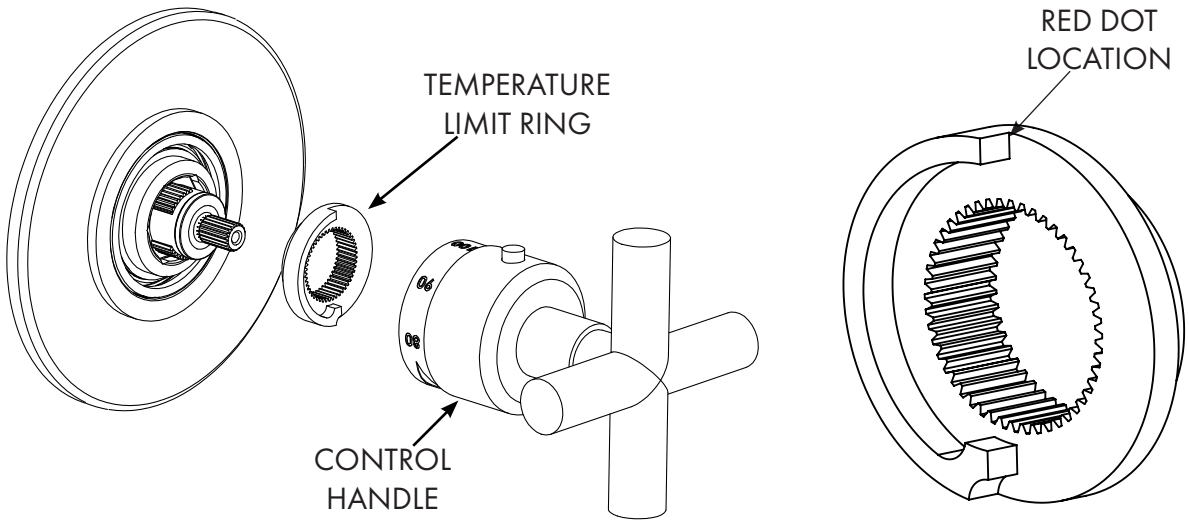

Temperature Setting

The delivered temperature of the valve varies depending on the temperature of the supplied hot water. The valve is factory set at a supplied temperature of 149°F under balanced pressures. Depending on your preferred hot water temperature setting, it may be necessary to adjust the calibrations of the valve. The limit override button is preset at 100°F and can be adjusted as described below.

- Select 100°F on the control handle.
- Use a thermometer to check the temperature of the water being delivered at one of the outlets.
- If the thermometer isn't reading 100°F adjust water temperature by turning the control handle slowly left or right by hand.
- Once the water temp is reading 100°F, without turning it, carefully remove the handle by unscrewing any mounting screws and pulling it off of the valve. Screw may be concealed and/or fastened with set screws (See Handle Install section).
- With the handle now removed slide off the Temperature Limit Ring and reinstall it with the red dot at the 12 o'clock position.
- Install the handle back on the valve with the push button aligned with the red dot at the 12 o'clock position.

350 DEWITT AVENUE BROOKLYN, NEW YORK 11207
+1-718-257-2800

Troubleshooting		
Malfunction	Cause	Solution
Cannot Regulate Temperature	Debris in check valves	Remove and clean check valves
	Water supply lines reversed	Reverse hot and cold supply lines
	Valve installed upside down	Reverse valve
Hot And Cold Water Do Not Mix	Lack of water pressure at one of the inlets	Correct water hot and cold supply connections
	Blocked shower head	Remove shower head and clean debris. If necessary, soak in a 50/50 mix of white vinegar/ water or a de-scaling agent until all dirt is dissolved.
Water Not Hot Enough/ Too Hot	Debris in check valves	Remove and clean check valves
	Valve not properly calibrated	Calibrate valve per Temperature Setting instructions
	Water heater setting incorrect	Adjust water heater temperature setting
Handle Temperature Does Not Match Water Temperature	Debris in check valves	Remove and clean check valves
	Valve not properly calibrated	Recalibrate valve (see Temperature Setting section)
	Uneven hot & cold water pressure	Check and balance supply pressures
Handle Does Not Turn	Mineral build up	Remove and clean cartridge (refer to Removal and Maintenance section)
Low Water Pressure	Supply pressure too low	Check and adjust water pressure at source
	Debris in cartridge and check valves	Clean cartridge and check valves
	Blocked shower head	Remove and clean; soak if necessary
Leaking Shower Head	Faulty cartridge in wall stop/ volume control	Repair or replace cartridge
Valve Installed Too Deep in Wall	Incorrect rough-in or finished wall depth	Install appropriate extension kit: SSEXT41 for SSTH1000 / SSTH3000 SSEXT51 for SSTH2000 / SSTH4000

350 DEWITT AVENUE BROOKLYN, NEW YORK 11207
+1-718-257-2800